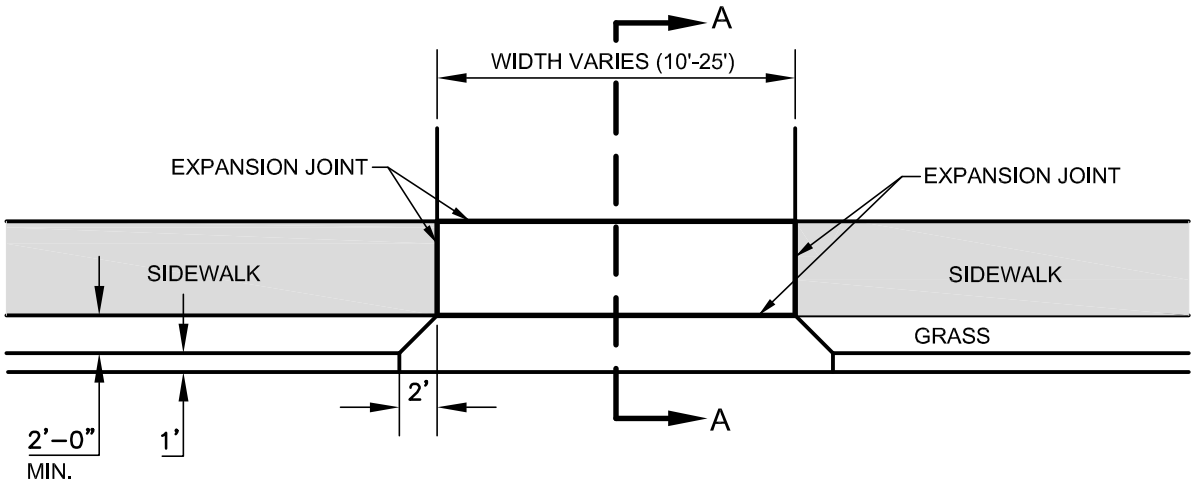

PLAN

ALL RESIDENTIAL DRIVE APRONS SHALL BE CONSTRUCTED OF 3500 PSI CONCRETE. FROM THE BACK OF THE APRON THE DRIVE SHALL BE EITHER CONCRETE OR ASPHALT.

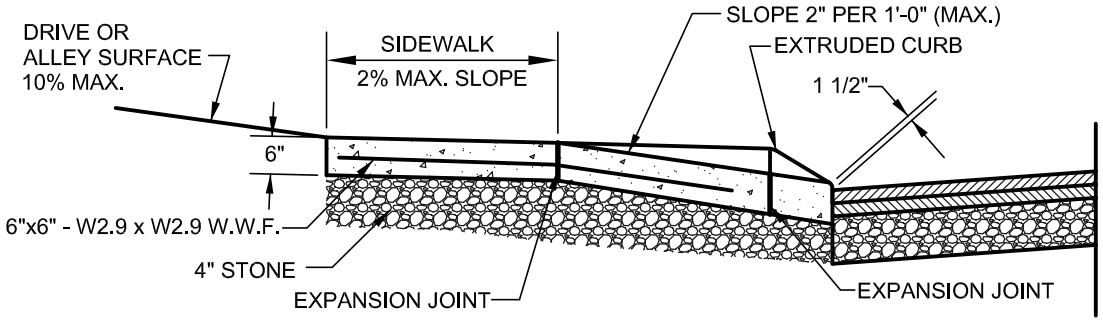

SECTION A-A

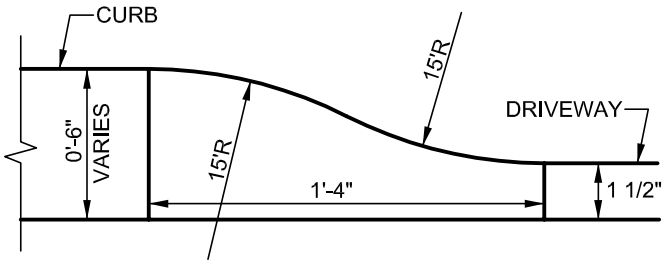

TYPICAL CURB TO DRIVE TRANSITION

Notes:

Additional right-of-way may be required near intersections.

Elements of this typical section may be revised if approved by the City Engineer.

CITY OF COLUMBIA TENNESSEE

DRIVEWAY APRON (RESIDENTIAL)

(NTS)

DATE
4-23-2012

DWG. NO.
SD-11